C.I.P.	510 DTC Country of Origin: GB	TAB.	I
		Date	04-05-18
		Revision	04-09-27

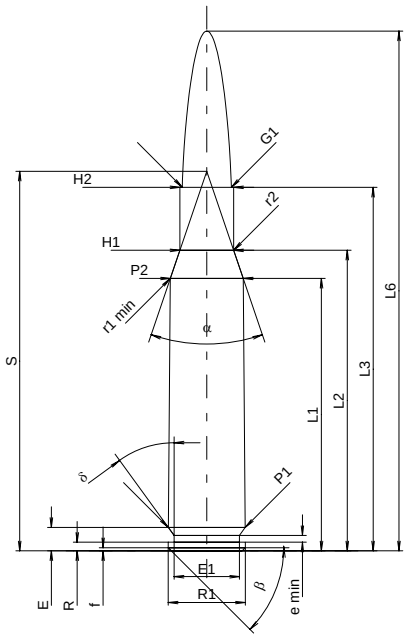

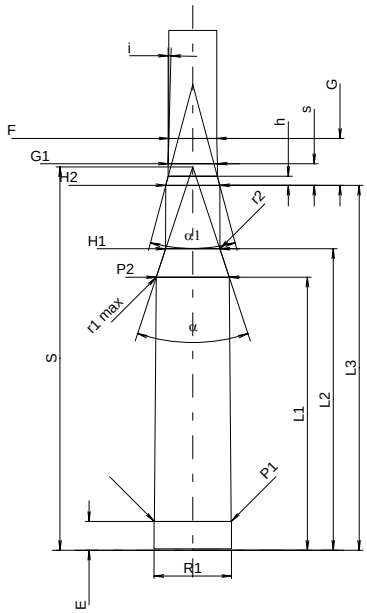

Scale 1:2

CARTRIDGE MAXI

Lengths

L1 1)*	=	72.04	-0.20
L2 1)*	=	79.48	-0.20
L3 1)	=	96.14	
L4	=		
L5	=		
L6	=	137.47	

Case Head

R	=	2.26
R1	=	20.42
R3	=	
E	=	6.20
E1	=	17.27
e min	=	1.80
δ	=	36°
f	=	0.84
β	=	45°

Powder Chamber

P1	=	20.38	
P2 1)*	=	19.28	-0.20

Junction Cone

α	=	37°33'42"
S	=	100.39
r1 min	=	3.18
r2	=	5.08

Collar

H1 *	=	14.22
H2 1)	=	14.22

Projectile

G1 1)	=	12.98
G2	=	
F	=	
L3+G 1)	=	108.53

Pressures (Energies)
Method Transducer

Pmax	=	3600	bar
PK	=	4140	bar
PE	=	4500	bar
M	=	25.00	
EE	=	14870	Joule

Miscellaneous Dimensions

Fe	=	0.15
delta L	=	

CHAMBER MINI

Lengths

L1 *	=	72.21
L2 *	=	79.73
L3 1)	=	96.52

Breech

R	=	2.26
R1	=	20.52
R2	=	
R3	=	
r	=	

Powder Chamber

E	=	7.62
P1 1)	=	20.37
P2 *	=	19.31

Junction Cone

α 1)	=	36°38'28"
S	=	101.37
r1 max	=	3.18
r2	=	6.35

Collar

H1 *	=	14.33
H2 1)	=	14.28

Commencement of Rifling

G1 1)*	=	12.99
G 1)*	=	12.39
α1	=	29°57'59"
h	=	2.41
s *	=	5.72
i 1)	=	1°25'01"
w	=	

Barrel

F 1)*	=	12.66
Z 1)	=	12.93

Grooves

b	=	3.43	
N	=	8	
u	=	381.00	
Q	=	129.63	mm²

Dimensions in << mm >>
Dimensions and Tolerances for Proof Barrels
see Appendix CR 1.

Notes: 1) Check for safety reasons
* Basic dimensions

Reproduction forbidden as well as in the form of extracts without approval of C.I.P.